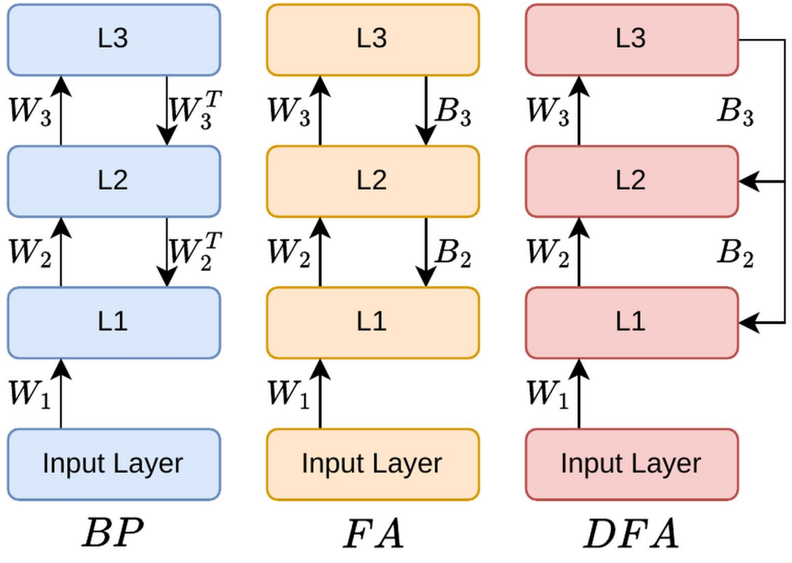

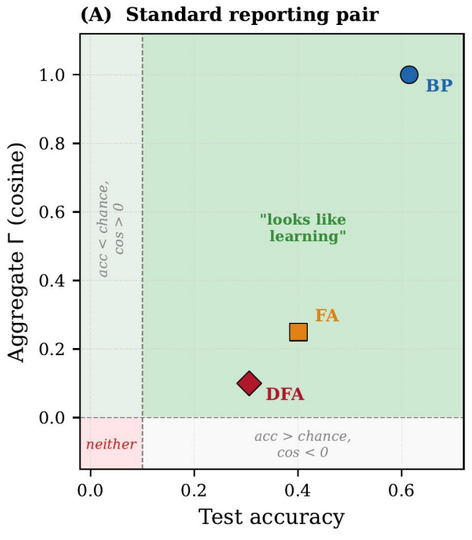

With standard reporting pair, FA and DFA reached non-trivial accuracy and positive cosine alignment in this setting

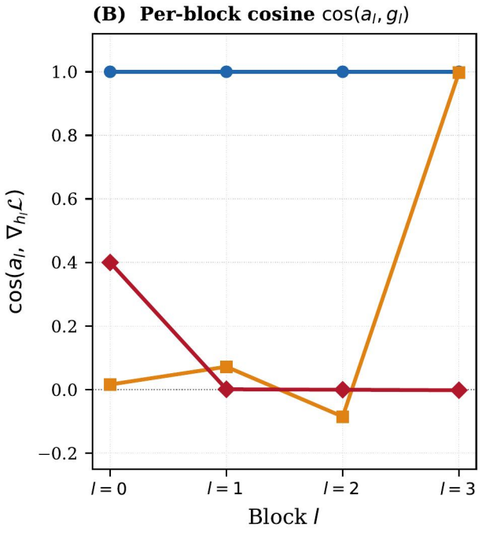

Aggregated cosine lies: shallow layers of FA and deep layers of DFA are not learning or aligned well

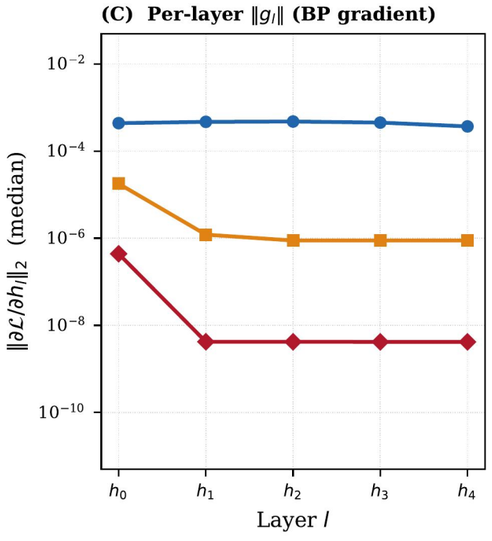

Reference also fails: DFA collapses to numerical noise at depth, FA decays 2 orders of magnitude across layers